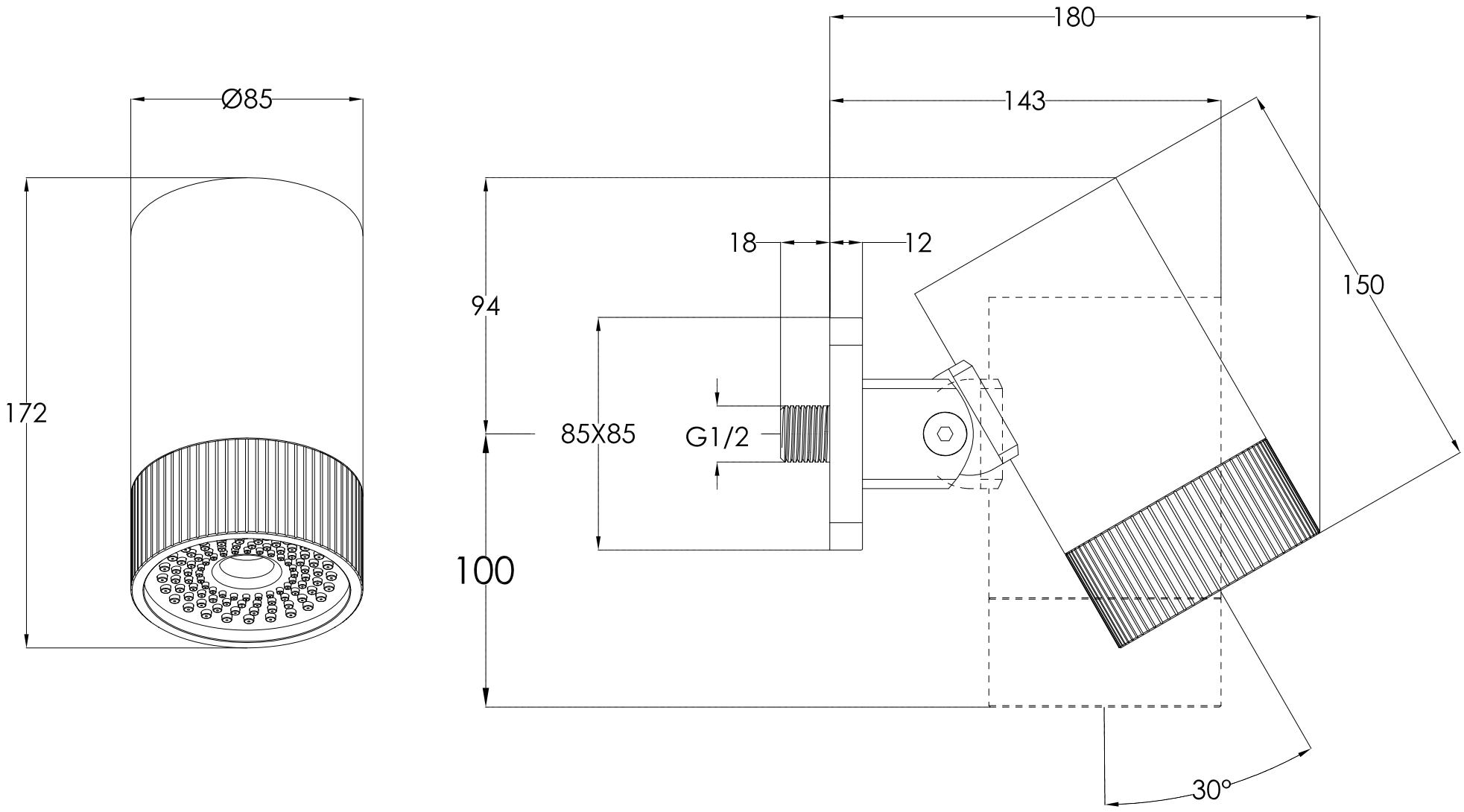
Ø85
172
180
143
150
18
12
94
85X85
G1/2
100
30°