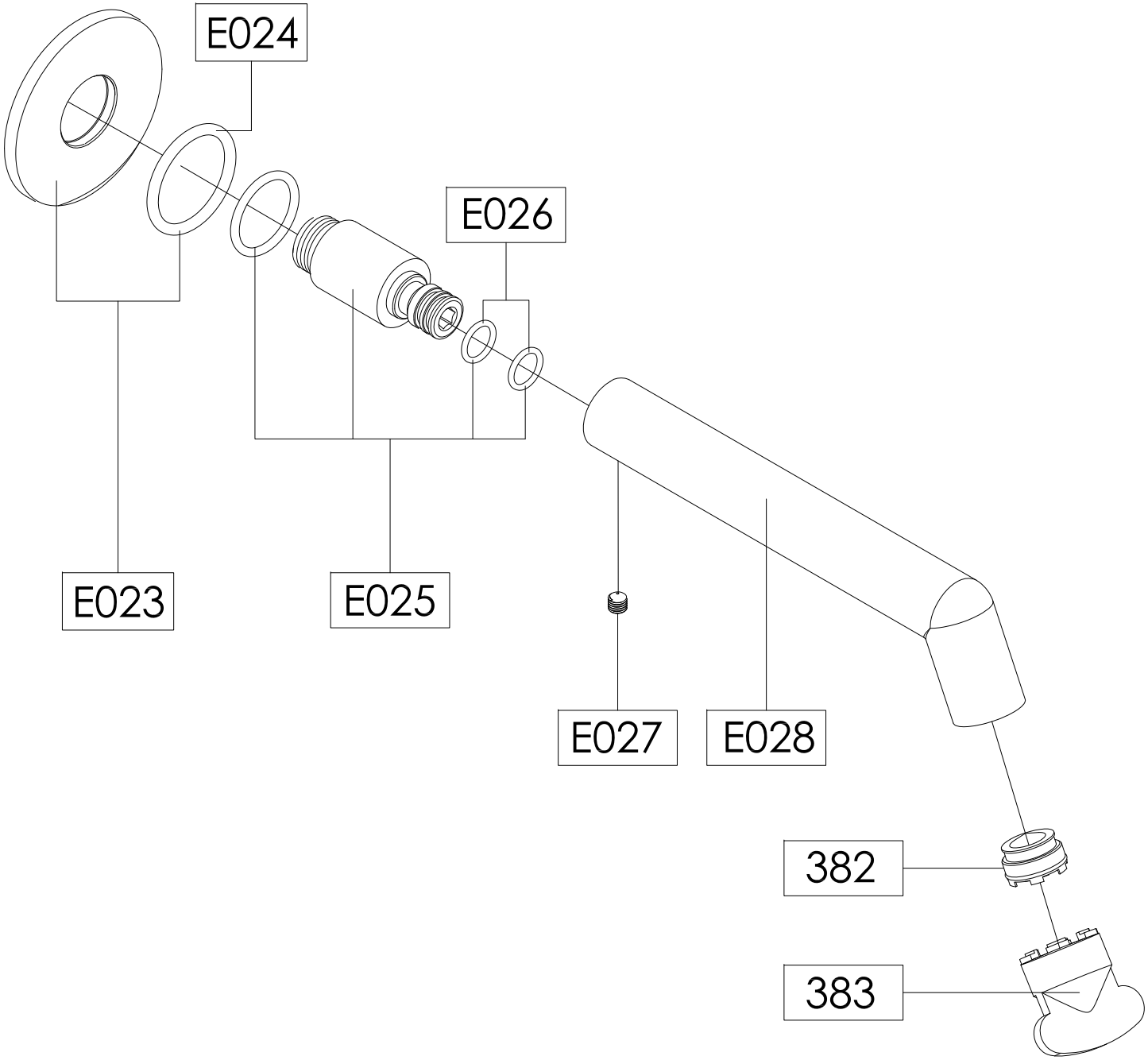ENGBU