INSTALLATIE VOORSCHRIFT

ECO 1/4 RONDE DOUCHECABINE met profiel

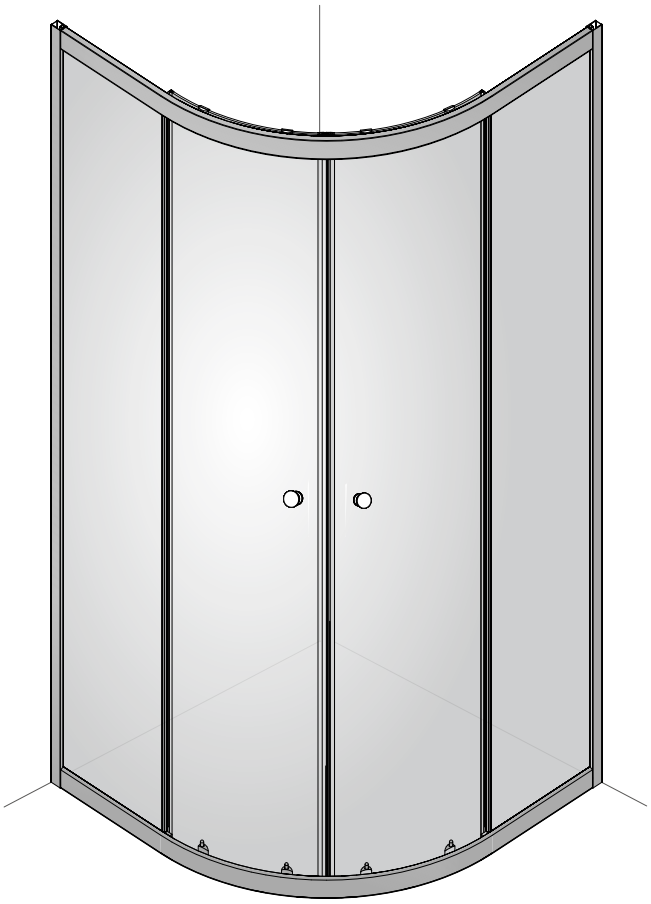

☐ 800x800x1900mm
(785-800) x (785-800) x1900mm

☐ 900x900x1900mm
(885-900) x (885-900) x1900mm

☐ 1000x1000x1900mm
(985-1000) x (985-1000) x1900mm

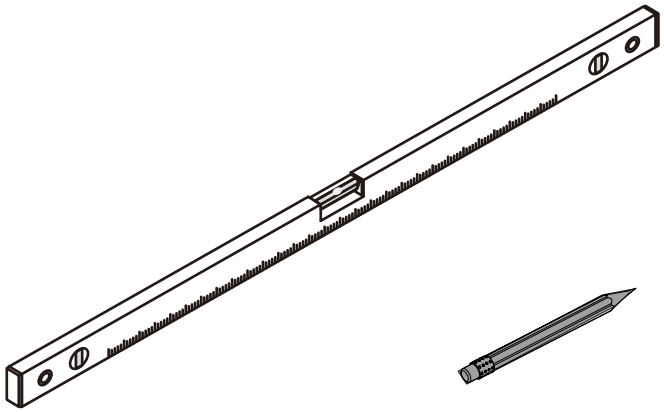



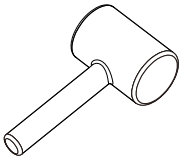

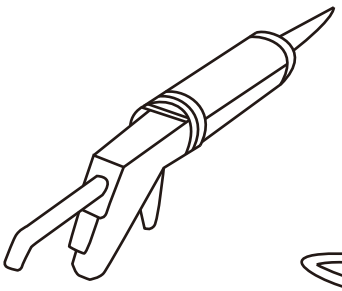

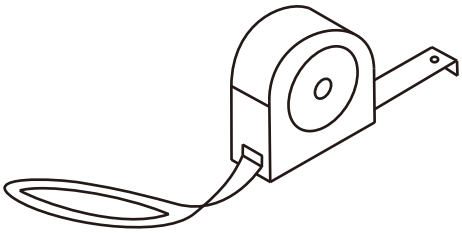

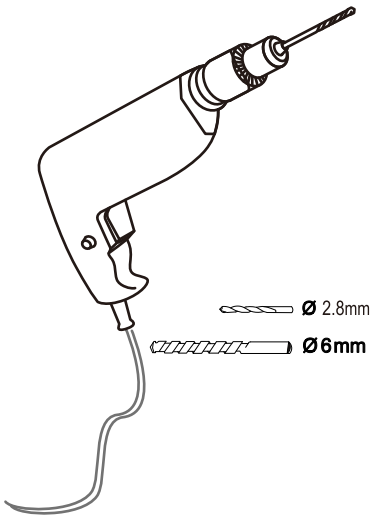

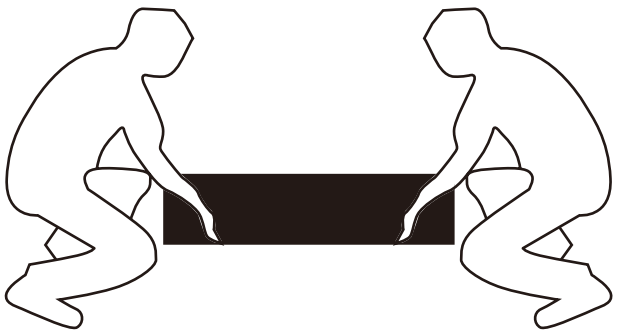

1







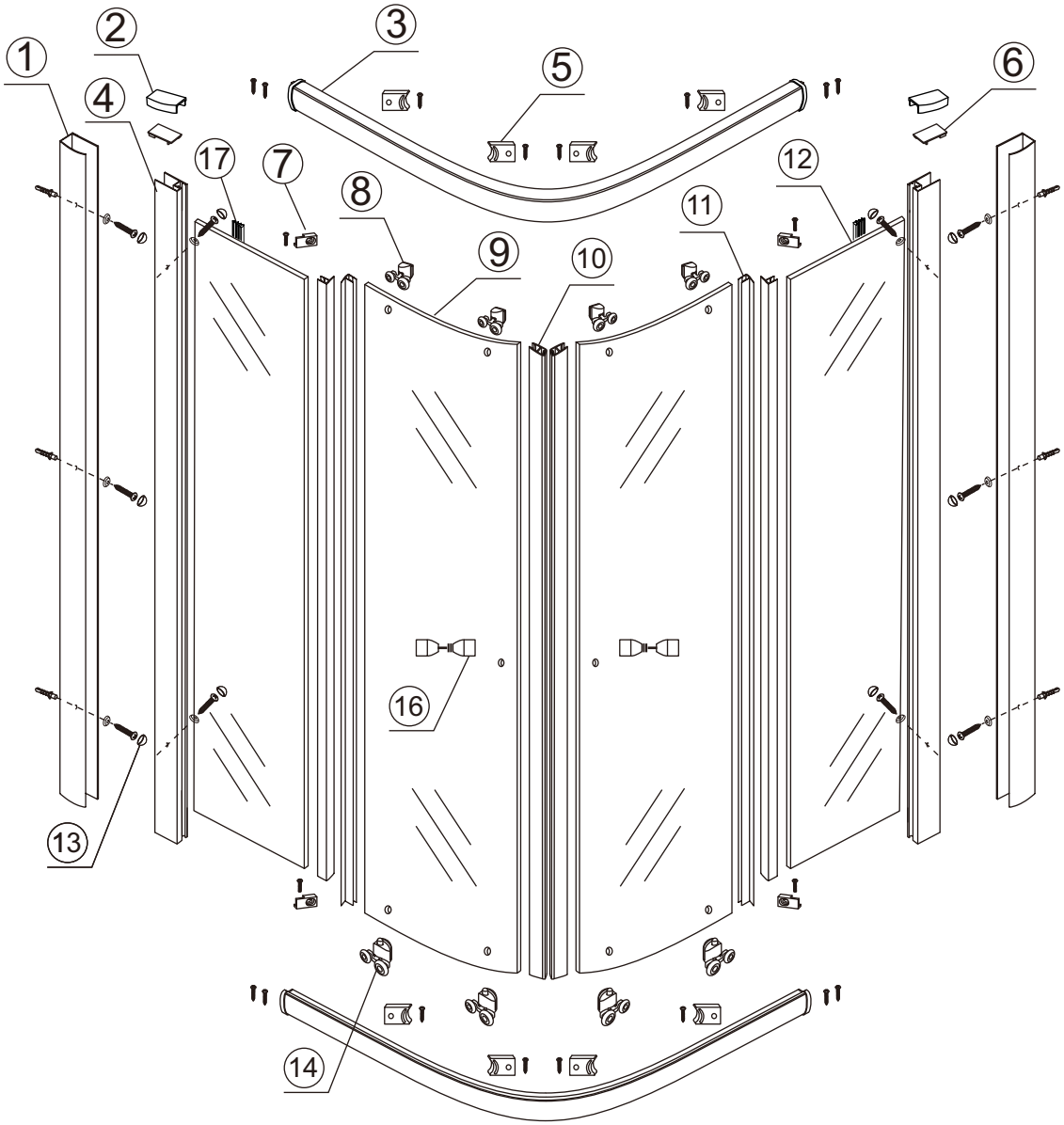
1
2
3
4
5
6
7
8
9
10
11
12
13
14
16
17

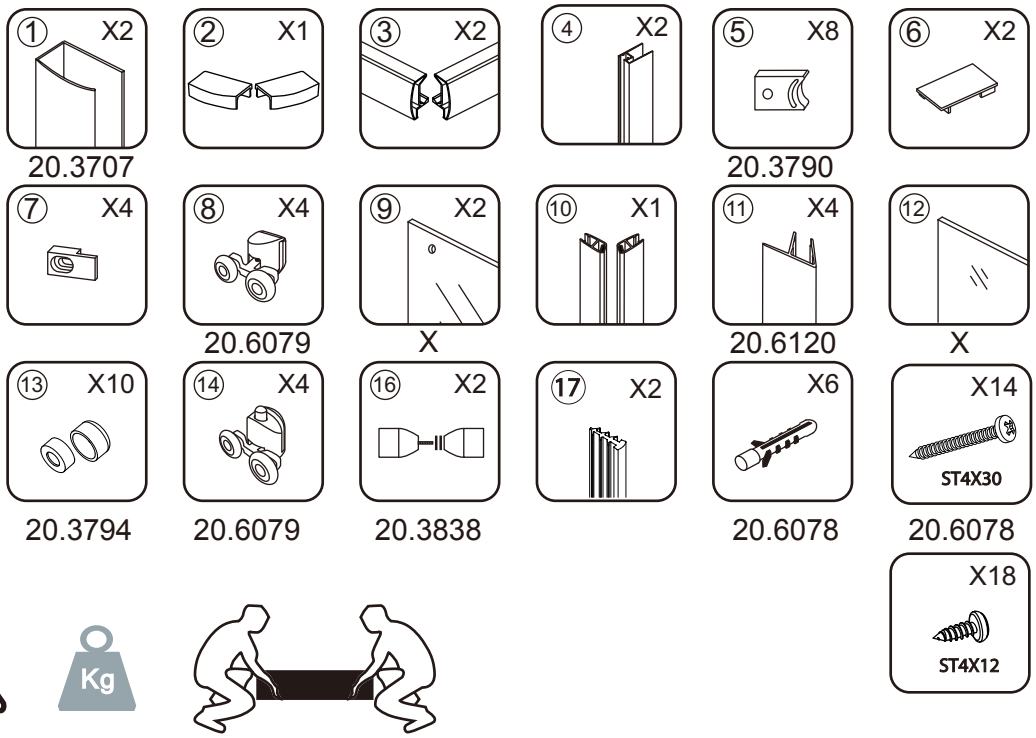
① X2
20.3707
② X1
③ X2
④ X2
⑤ X8
20.3790
⑥ X2
⑦ X4
⑧ X4
20.6079
⑨ X2
X
⑩ X1
⑪ X4
20.6120
⑫
X
⑬ X10
20.3794
⑭ X4
20.6079
⑯ X2
20.3838
⑰ X2
X6
20.6078
X14
ST4X30
20.6078
X18
ST4X12
Kg

	W1
800x800x1900mm (785-800)x(785-800)x1900mm	770-785mm
900x900x1900mm (885-900)x(885-900)x1900mm	870-885mm
1000x1000x1900mm (985-1000)x(985-1000)x1900mm	970-985mm

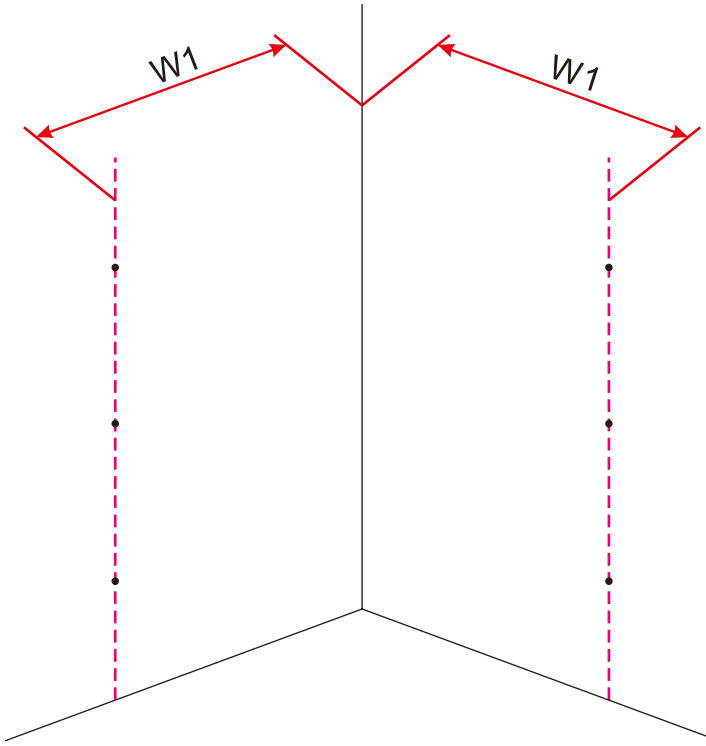

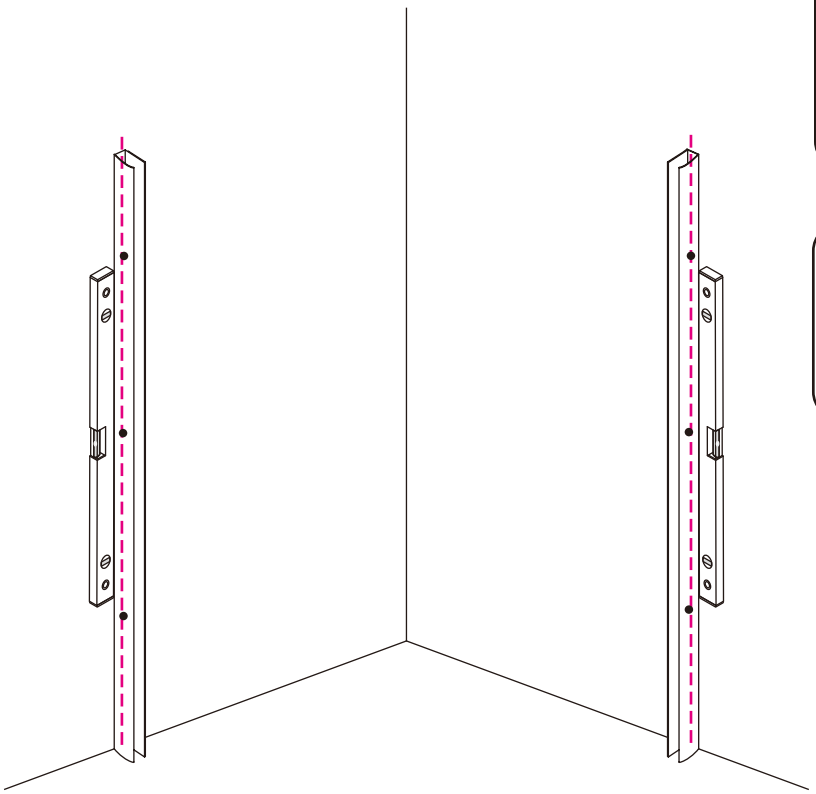

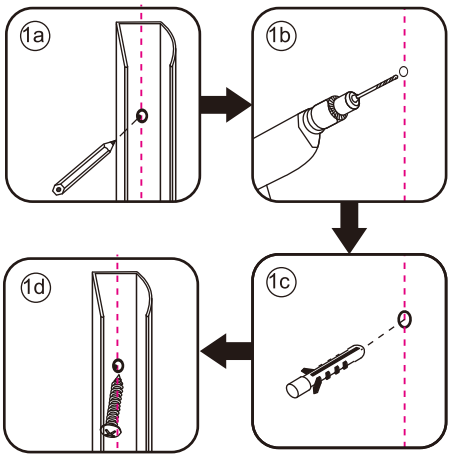

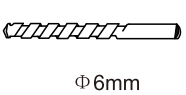









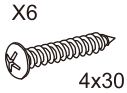

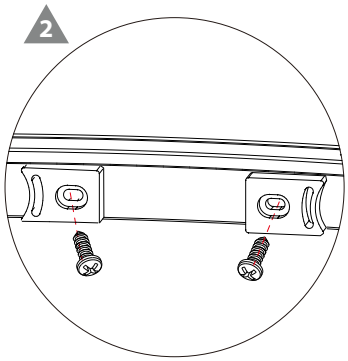

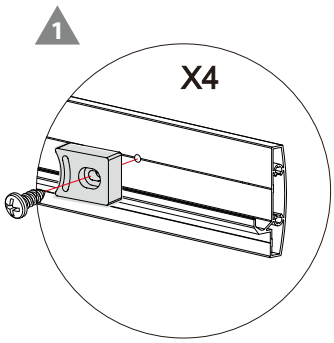

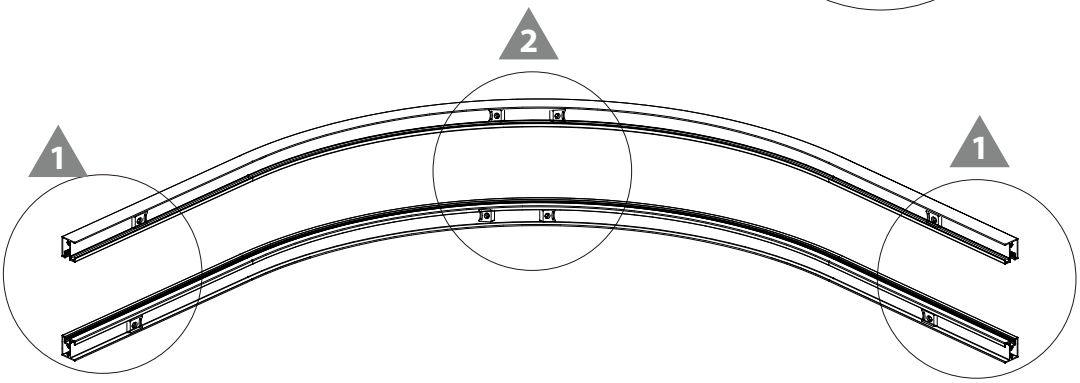

5 X8



X8



ST4X12

4

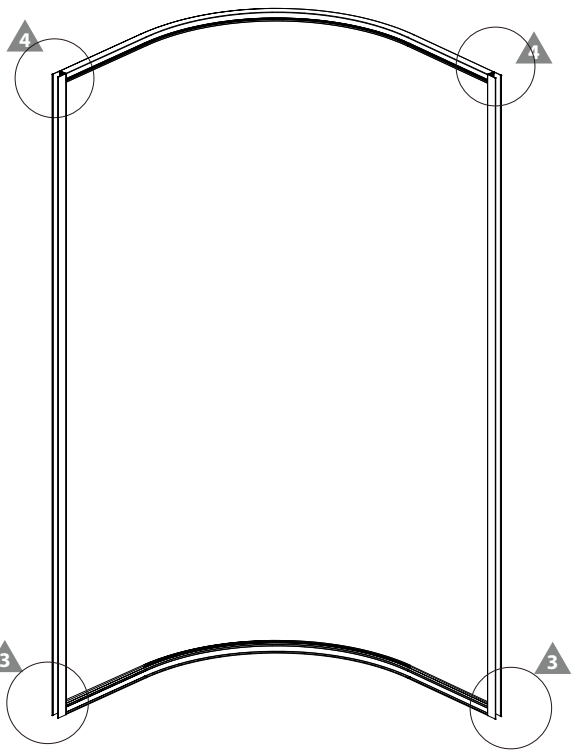

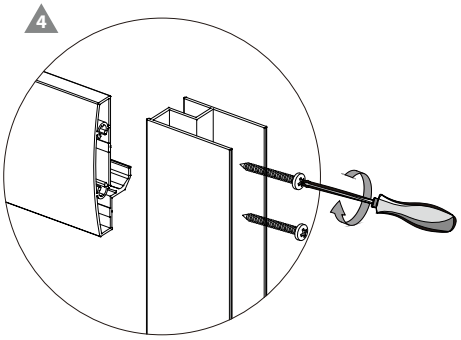

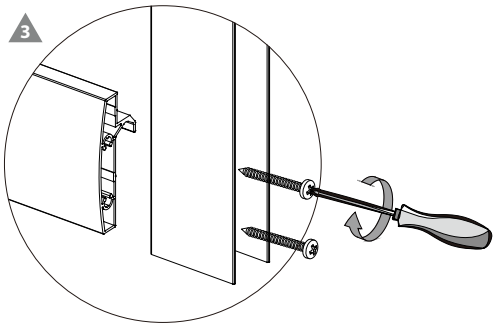







X8



ST4X30

5

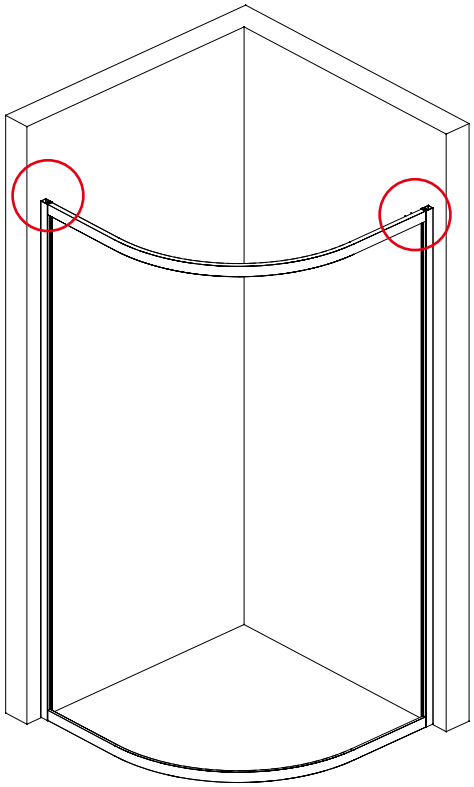

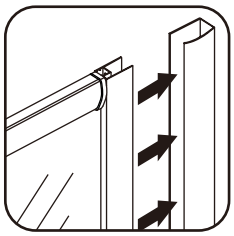



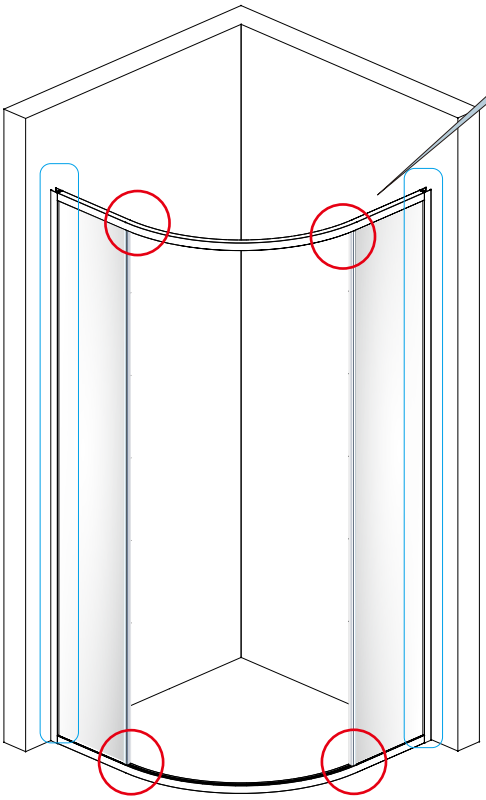

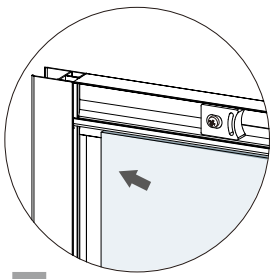

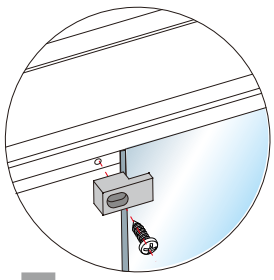

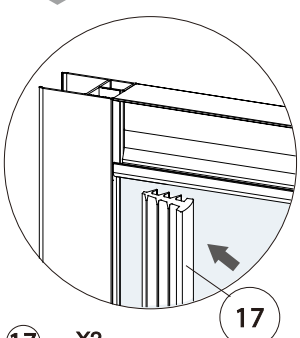

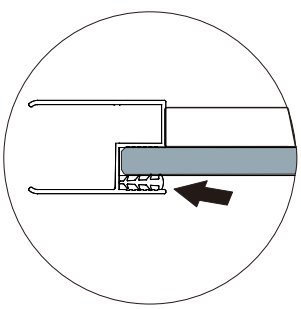



X4
ST4X12

7 X4

17 X2

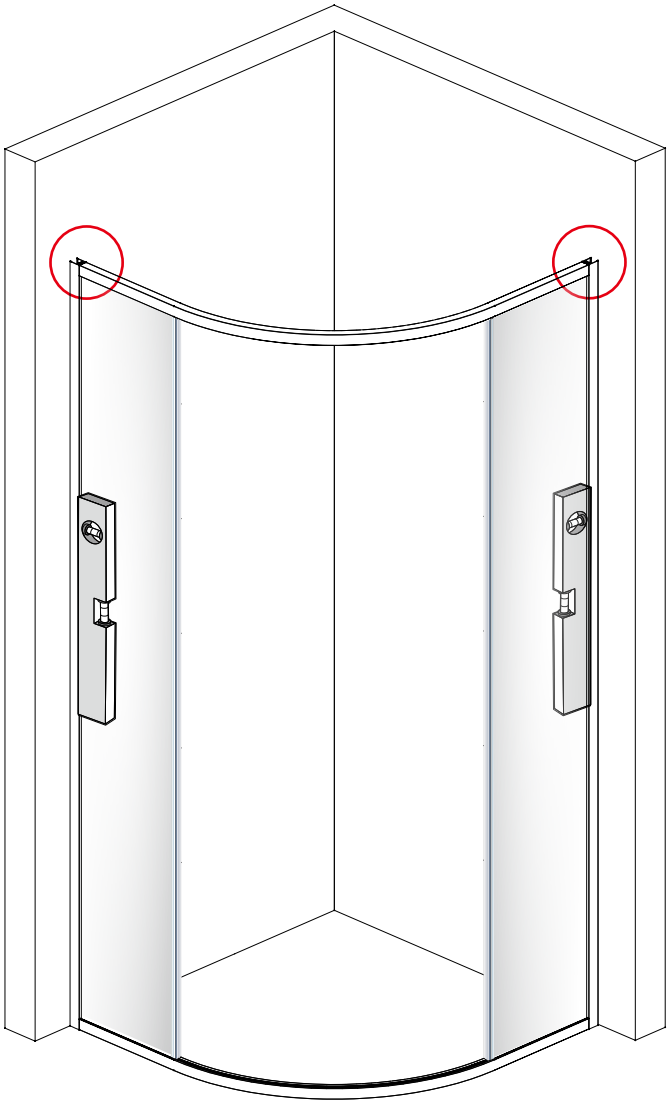

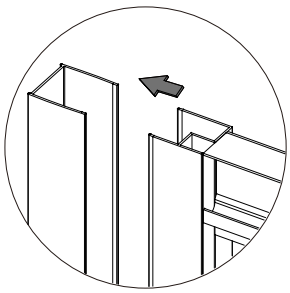

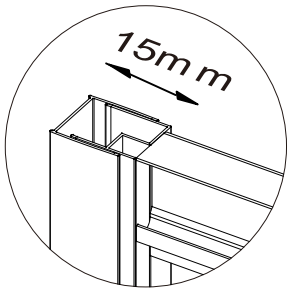

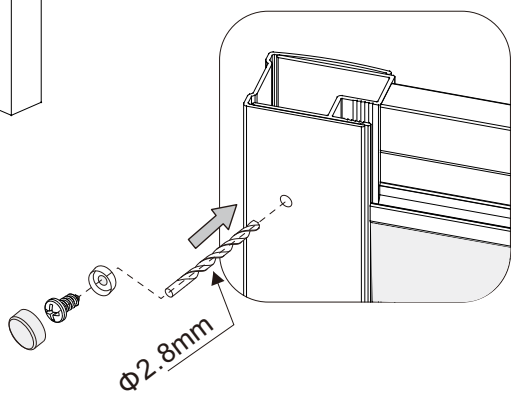

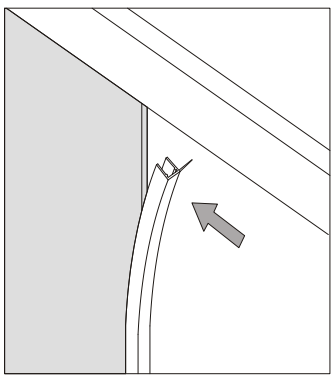

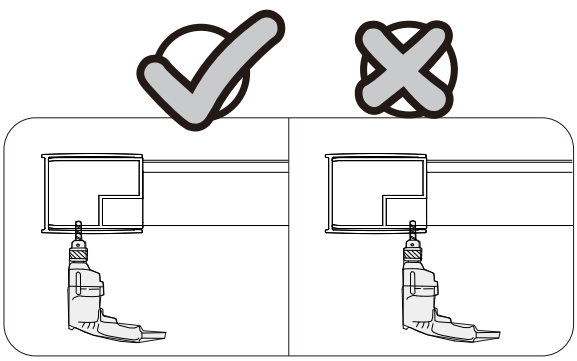

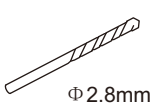

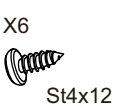







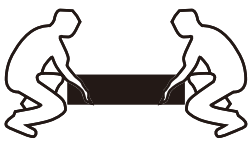

6

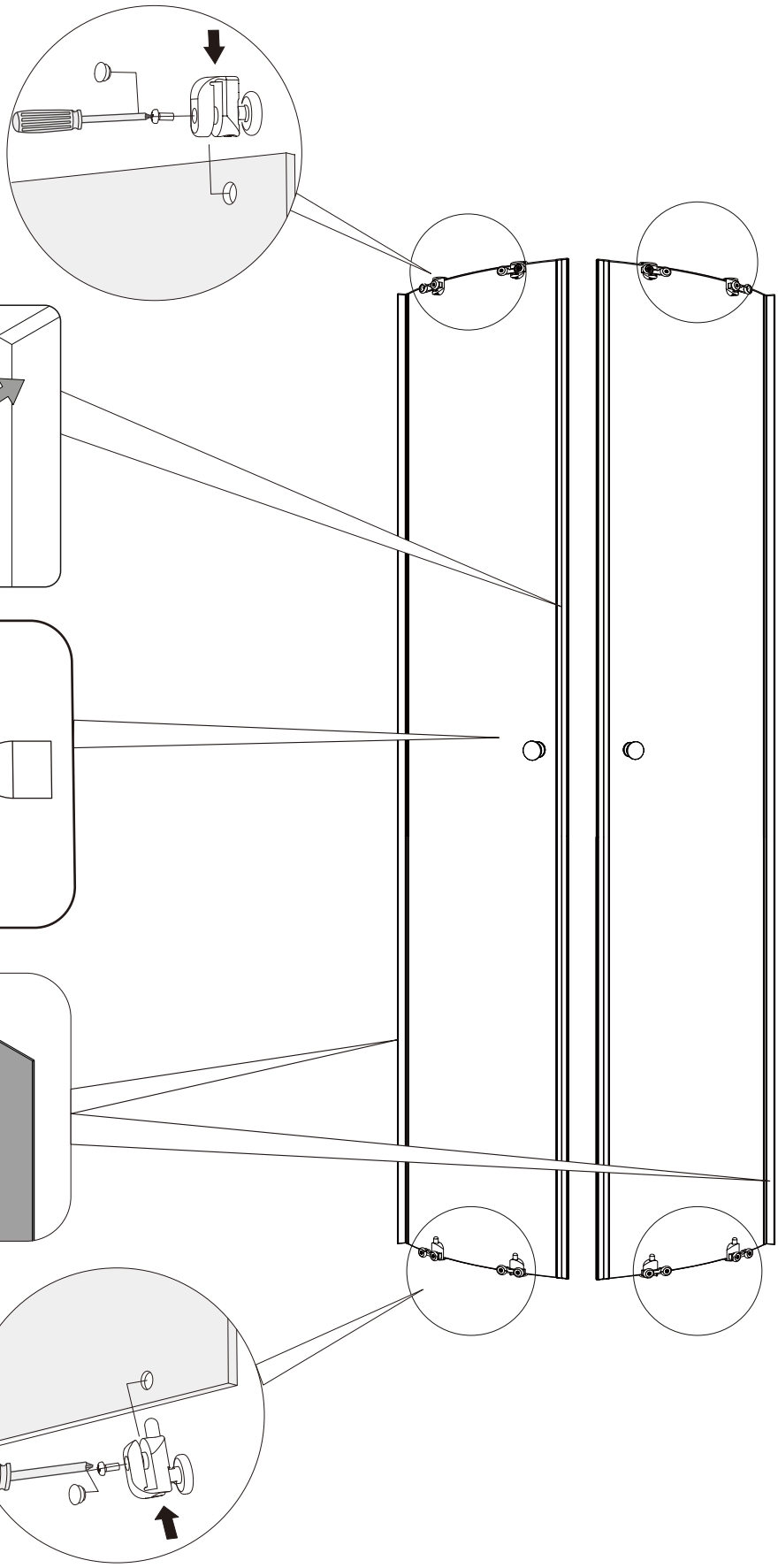

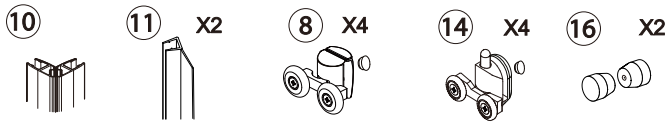
10
11
X2
8
X4
14
X4
16
X2


Kg

Boven

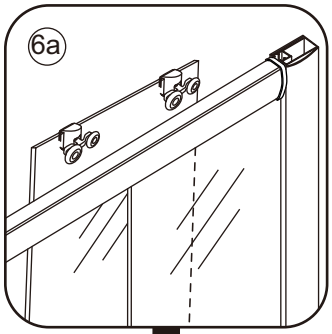

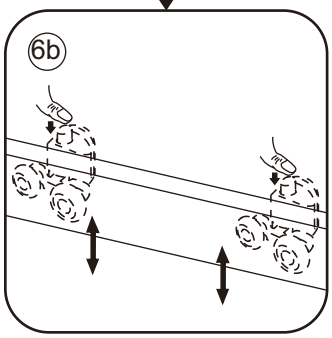

Onder

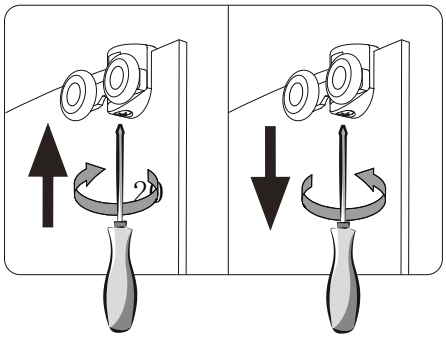

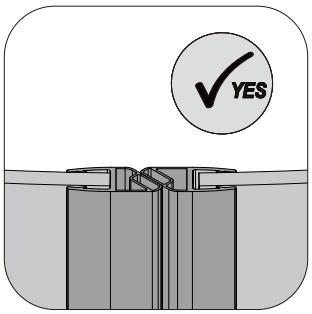

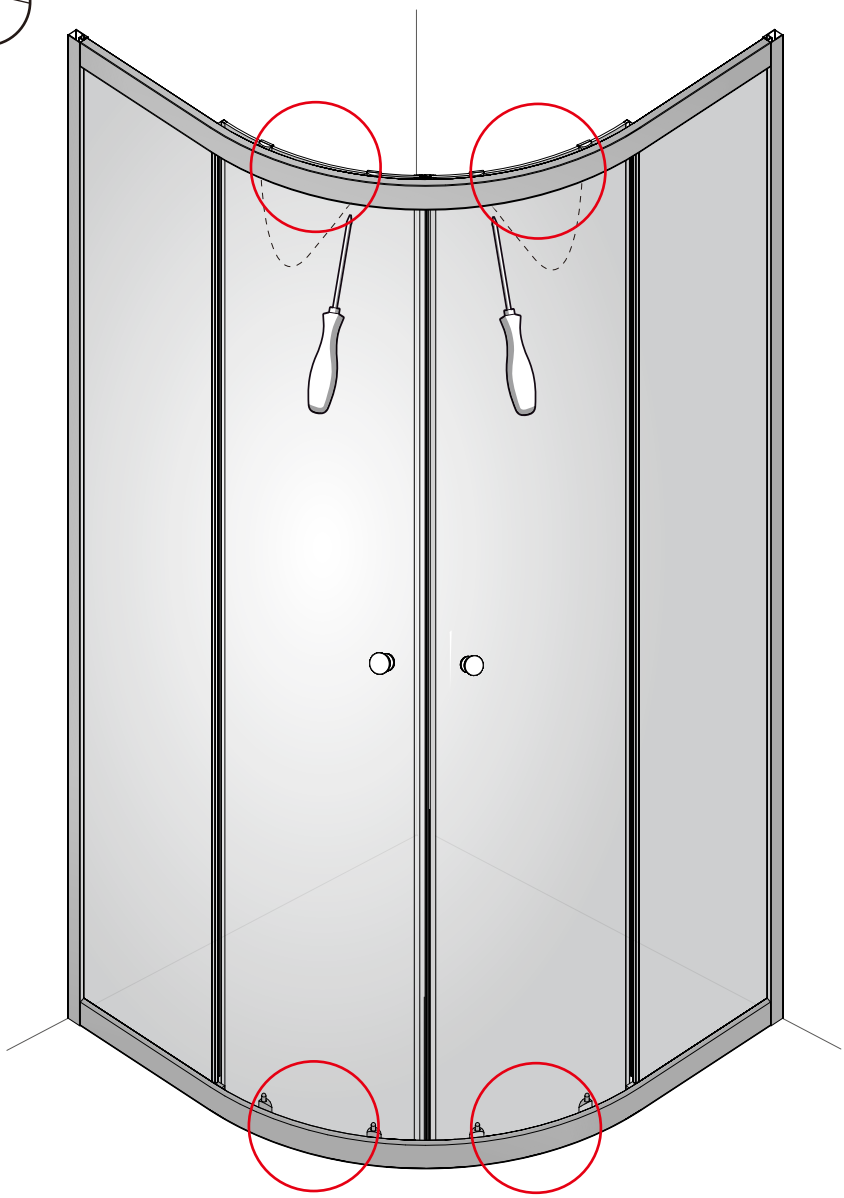



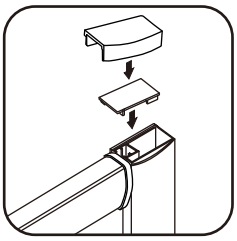

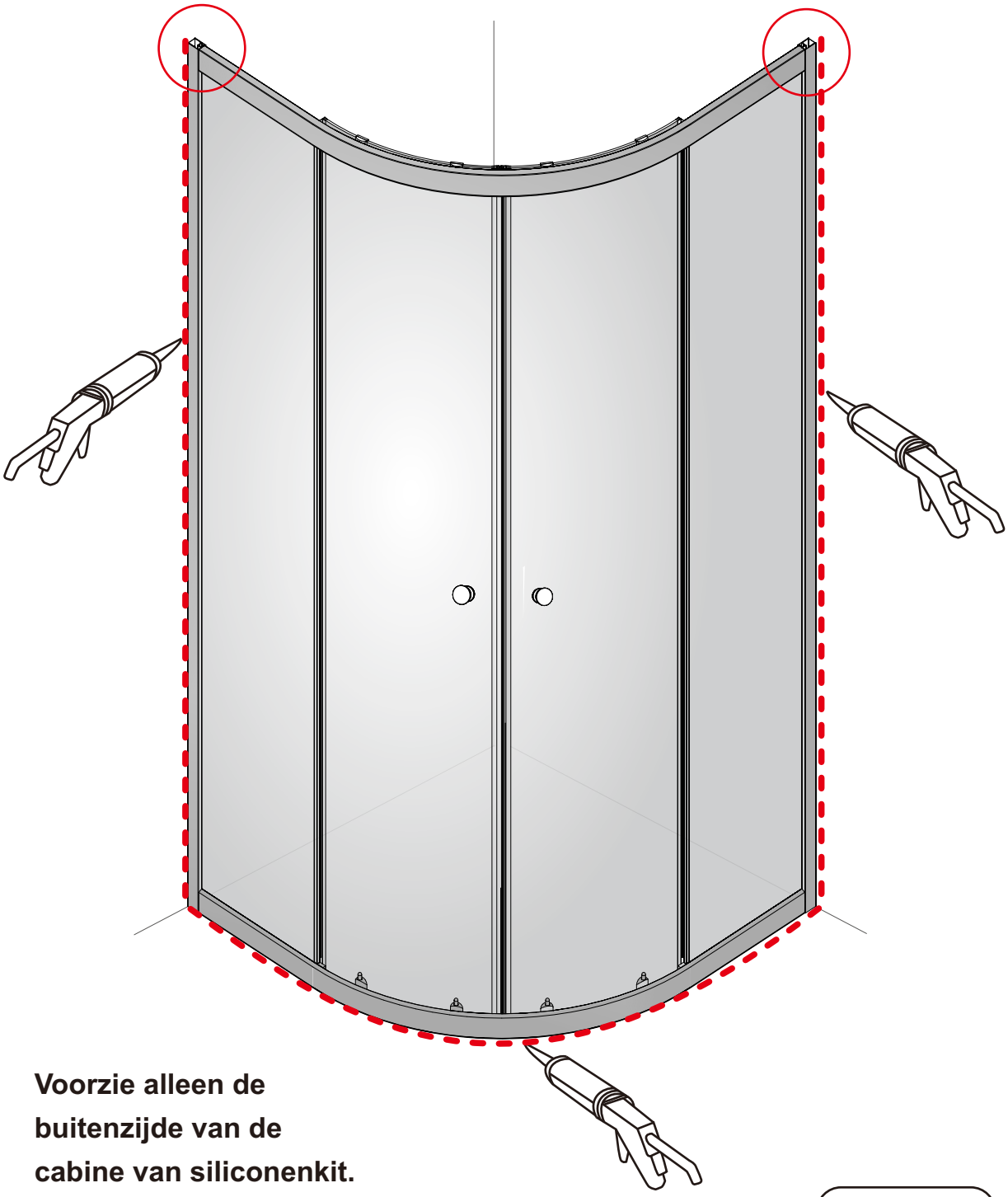

Voorzie alleen de buitenzijde van de cabine van siliconenkit.



